ABSTRACT

Energy management in modern society is central to meeting the growing demands for reliable and sustainable power. This project focuses on the optimal design and simulation of an integrated system model utilizing a solar photovoltaic (PV) array that employs the Perturb and Observe method for Maximum Power Point Tracking (MPPT) [1], alongside lithium-ion battery storage and an alkaline electrolyzer. The solar PV array, using the Perturb and Observe technique, efficiently harnesses renewable energy by maximizing power output under changing environmental conditions. Lithium-ion batteries offer dependable energy storage to ensure supply during periods of low solar generation. The alkaline electrolyzer uses excess renewable energy for hydrogen production, increasing both the system's flexibility and sustainability. By integrating these advanced technologies, the system model is engineered to deliver energy on demand, minimize residual energy losses, and optimize overall efficiency. These key components of the model ensure the stable production of hydrogen using various renewable sources of energy. This process provides assurance by storing energy for future use. Each system component of the system model is assigned with its own performance for producing hydrogen, ensuring that their unified operation maximizes renewable energy utilization and fosters a sustainable, integrated energy solution for diverse applications. This project demonstrates the synergy among advanced renewable generation, innovative storage technologies, and efficient hydrogen production, highlighting the potential of system models that are robust, scalable, and adaptable to future energy needs. This combined abstract incorporates all relevant technical aspects and provides a strong, clear overview of the system model along with the specific role and interconnection of each component.

List of Figures

1. Classified Hydrogen Pressure Vessel 17

2. Cost Breakdown for Type-IV 700-bar Hydrogen Storage Systems 19

3(a). Liquid Hydrogen Storage System from Linde 20

3(b). V–I Characteristics Curve of PV System Showing MPPT Operating Point 22

4. Solar-Only Block Diagram 23

5. First-Order Equivalent Circuit Used to Model Li-Ion Batteries 24

6. Electrolyzer Main Model 27

7. Storage System Main Model 28

7.1. Current Characteristics of Electrolyzer, Storage, and PV Systems 31

7.2. Zoomed Current Profile of PV and Electrolyzer 32

7.3. Cumulative Energy Consumed by Electrolyzer and Converter 32

7.4. Voltage Response of PV Array and Electrolyzer 34

7.5. Hydrogen Pressure Profile Within the Storage Tank 35

7.6(a). Hydrogen Mass Rate and (b) Volumetric Rate 35

7.7. Cumulative Hydrogen Production (kg) 36

7.8. Battery State of Charge (SoC) Variation 37

7.9. Grid and Storage Voltage Variation 38

List of Tables

1. Model Parameters and Characteristics 16

2. Classification and feature of hydrogen storage vessel types 18

3. Comparative performance of CH storage against DOE targets 19

4. PV System Specifications 21

5. Approximate operating values observed from simulation plots 39

Contents

Acknowledgement	i
Declaration	ii
Abstract	iii
List of Figures	iv
List of Tables	v
1. Introduction	10
2. Literature Survey	3
3. Objective	4
4. Alkaline Electrolyzer	14
5. Photovoltaic (PV) System	20
6. Results and Discussion	32
7. Conclusion	41
8. References	42

1 Introduction

With the increasing global emphasis on sustainable and autonomous energy systems, hybrid renewable energy configurations have become a cornerstone of clean and reliable power generation for remote and off-grid regions. Among various renewable technologies, solar photovoltaic (PV) [2] systems have emerged as one of the most efficient and cost-effective solutions for generating green electricity. However, their dependence on solar irradiance and weather conditions introduces intermittency, which can lead to fluctuations in power output and overall system instability.

To overcome these limitations, stand-alone hybrid energy systems [3] that combine renewable generation with efficient energy storage and hydrogen production have gained significant attention. The proposed hybrid system integrates Photovoltaic (PV) panels, a Li-ion Battery Energy Storage System (BESS) [4], and an Electrolyzer Unit to form a sustainable and self-regulating energy system [5]. The PV array serves as the primary energy source, converting solar energy into electrical power [6], while the Li-ion battery provides short-term storage and compensates for rapid fluctuations in solar output. The electrolyzer utilizes the excess electrical power to split water into hydrogen and oxygen, thus enabling long-term renewable energy storage in the form of hydrogen .

One of the major challenges in such stand-alone systems is maintaining energy balance, voltage stability, and optimal hydrogen production under varying irradiance and load conditions. Since the PV output depends directly on temperature and insolation, an MPPT (Maximum Power Point Tracking) technique is employed to extract the maximum possible power from the PV module at any given time. The use of MPPT ensures that the PV array consistently operates at its optimal voltage and current, thereby improving system efficiency and ensuring adequate energy supply for both the battery and electrolyzer.

The system also employs a power management controller that coordinates energy distribution among the PV array, Li-ion battery, and electrolyzer. During periods of high solar irradiance, the controller prioritizes battery charging until its State of Charge (SOC) reaches a set limit. Once the battery is fully charged, excess power is automatically directed to the electrolyzer for hydrogen production. Conversely, during periods of low irradiance or high load demand, the battery discharges to maintain voltage and supply continuity, ensuring that the electrolyzer continues to operate at stable input conditions.

This hybrid architecture enhances both short-term and long-term energy reliability, short-term through the Li-ion battery's fast charge-discharge response, and long-term through hydrogen storage. The produced hydrogen can be stored [7] in pressurized tanks and later utilized in fuel cells or hydrogen combustion engines, thus completing a renewable energy cycle with zero carbon emissions.

In this project, the design and simulation of a stand-alone PV–Li-ion–Electrolyzer hybrid system are carried out using MATLAB/Simulink 2025a. The simulation framework includes the modeling of PV panels, DC–DC converters, MPPT controllers, Li-ion battery dynamics, and electrolyzer performance under various operating conditions. The developed model is tested under multiple scenarios such as constant irradiance, variable solar input, and load fluctuation to evaluate system efficiency, hydrogen generation rate, and energy stability.

The performance of the system is analyzed in terms of:

1. PV output power and tracking efficiency under MPPT control,
2. Battery charging/discharging cycles and SOC variation,
3. Electrolyzer current and hydrogen production rate,
4. Overall energy balance and conversion efficiency.

Simulation results demonstrate that the system effectively maintains energy stability under dynamic environmental conditions and ensures continuous hydrogen production. This proposed model validates the technical feasibility of using hybrid renewable systems for off-grid energy generation and storage, highlighting their potential role in future hydrogen-based clean energy infrastructures.

2 Literature Survey

Overview of System Integration Hybrid energy systems that combine PV, lithium-ion batteries, and hydrogen production via alkaline electrolyzers address PV intermittency and enhance overall energy management. Lithium-ion batteries offer high-efficiency short-term storage, buffering PV power fluctuations, while hydrogen production through water electrolysis stores excess energy for long-term needs or grid supplementation. The alkaline electrolyzer is a well-established technology known for good efficiency and lifespan, particularly suitable for large-scale renewable hydrogen production. MPPT and PV Control Techniques Maximum Power Point Tracking (MPPT), especially the Perturb and Observe (P&O) algorithm, is the industry standard for maximizing PV output under variable irradiance conditions. Accurate and fast MPPT ensures optimal energy harvest, which is crucial for downstream components like batteries and electrolyzers to operate efficiently. Energy Management and Control Strategies Coordinated control strategies are vital to effectively utilize both the lithium-ion battery, handling rapid power variation, and the hydrogen subsystem storing energy for longer duration or for delayed use. Advanced signal decomposition techniques, such as Adaptive Wavelet Packet Decomposition (AWPD), are being introduced for real-time PV power signal analysis, enabling optimal dispatch between battery and electrolyzer based on time-scale and system response. Genetic Algorithms and dynamic programming have been used for optimizing the sizing, operation, and economic performance of hybrid PV-battery-hydrogen systems. System Modeling and Simulation Results Simulation studies with actual PV data demonstrate that standalone lithium-ion batteries (e.g., sized at 10% of PV capacity) may be inadequate for full PV smoothing; integrating hydrogen production via alkaline (and optionally, solid oxide) electrolyzers significantly improves energy utilization and grid compliance. Results from a 15 MW PV simulation indicate coordinated operation enables peak hydrogen generation during excess PV periods, reduces curtailment, and smooths output fluctuations to meet stringent grid requirements. Alkaline electrolyzers, when paired with robust MPPT and hybrid storage control, achieve high hydrogen production rates with reliable system stability. Comparative Insights and Technical Feasibility Comparative reviews reveal lithium-ion batteries _excel at fast response and efficiency but are limited in long-duration storage, while hydrogen functions as a cost-effective, long-term energy carrier. Technical feasibility for green hydrogen production from stand-alone PV systems is established in case studies, supporting the integration of MPPT-PV, battery storage, and electrolyzed hydrogen for remote and grid-support applications.

3 Objective

The primary focus of our project is to build and run an integrated system model comprising a solar photovoltaic model, lithium-ion battery, and an alkaline electrolyzer to produce hydrogen and provide its storage. The specific objectives of the work are:

1. To produce an accurately running model; it includes a solar photovoltaic model, Li-ion battery & an alkaline electrolyzer all representing a compact and efficient system model.
2. To analyze the optimal sizing of all the components in the model for improved performance and reliability under different weather and load conditions.
3. To study and simulate the energy management strategies for effectively balancing the energy supply and demand between PV, battery, and electrolyzer systems.
4. To evaluate the overall system efficiency and identify possible losses and improvements for maximum hydrogen yield.
5. To assess the feasibility of the standalone system for grid-independent operation by examining technical and economic aspects.
6. To investigate the capability of the system to provide uninterrupted power and hydrogen storage through integrated short-term and long-term energy storage.
7. To compare the proposed integrated model with conventional energy systems in terms of sustainability, reliability, and potential for real-world application.

4 Alkaline Electrolyzer

The alkaline electrolyzer (AEL) [8] serves as the key subsystem in the proposed Stand-Alone PV–Li-ion–Electrolyzer System for hydrogen production and storage. It performs the electrochemical decomposition of water into hydrogen and oxygen using electrical energy supplied by the PV–battery hybrid system. The AEL technology is a well-established, robust, and cost-effective solution for large-scale hydrogen production due to its simplicity of operation, high reliability , and tolerance to impurities in the water feed.

In the present model, the electrolyzer [9] operates dynamically, converting surplus electrical energy from the PV array into chemical energy stored in the form of hydrogen. This hydrogen is then stored in a pressurized vessel for later use. The electrolyzer in the model operates under isotherml conditions (60°C–80°C) and uses an aqueous 30 wt% KOH electrolyte, similar to the Erre Due 30kW unit described by Valverde-Isorna et al.
(2016).

4.1 Working Principle

The electrochemical reactions occurring in an alkaline electrolyzer are:

$$\text{Cathode: } 2H_2O + 2e^- \rightarrow H_2 + 2OH^-$$

$$\text{Anode: } 2OH^- \rightarrow \tfrac{1}{2}O_2 + H_2O + 2e^-$$

$$\text{Overall: } H_2O(l) \rightarrow H_2(g) + \tfrac{1}{2}O_2(g)$$

The electrolyte (KOH) facilitates the conduction of OH^- ions between electrodes, while electrons travel through the external circuit. The overall reaction is endothermic and requires both electrical and thermal energy input to sustain electrolysis at the desired rate.

4.2 Electrical Sub-Model

The electrolyzer's electrical behavior is modeled based on the cell voltage–current relationship derived from steady-state empirical data and thermodynamic fundamentals . The stack voltage is calculated as:

$$W_{el} = N\, I_{st}\, U_{cell} \tag{1}$$

$$U_{cell} = U_{rev} + \frac{r}{A} I_{st} + s \ln\left(t \frac{I_{st}}{A} + 1\right) \tag{2}$$

Where,

- U_{cell}: Electrolyzer cell voltage (V)
- U_{rev}: Reversible voltage (Nernst potential) (V)
- I_{st}: Stack current (A)
- N: Number of cells (-)
- A: Electrode area (m^2)
- r: Parameter related to electrolyte ohmic resistance ($\Omega \cdot m^2$)
- s,t: Overvoltage coefficients of the electrodes (V, $A^{-1}m^2$)

The reversible voltage, which represents the theoretical minimum voltage to split water, is determined by the Gibbs free energy change:

$$U_{rev} = \frac{\Delta G}{zF} \tag{3}$$

where $z = 2$ is the number of electrons per H_2 molecule, and $F = 96485$ C mol^{-1} is Faraday's constant.
At 25°C, $\Delta G = 237.13$kJ mol^{-1}, thus $U_{rev} = 1.229$V.
The temperature dependence of ohmic and overvoltage parameters follows :

$$r(T) = r_0 + r_1 T \tag{4}$$

$$t(T) = t_0 + t_1 T + t_2 T^2 \tag{5}$$

where r_0, r_1, t_0, t_1, t_2 are determined through parameter fitting.

For the modeled system, typical empirical values are:

$r0 = 4.75 \times 10^{-3}$ VA^{-1} m2, $r1 = -1.3 \times 10^{-5}$ VA^{-1} m2∘C^{-1},
$s = 0.35$ V, $A = 0.06$ m^2, $N = 60$ cells.

4.3 Hydrogen Production Sub-Model

The Faraday law of electrolysis governs hydrogen generation as a direct function of current:

$$\dot{n}_{\mathrm{H_2}} = \frac{\eta_F \, N \, I_{st}}{zF} \tag{6}$$

$$\dot{m}\ \mathrm{H2} = \dot{n}\mathrm{H2}\ M\mathrm{H2} \tag{7}$$

where,

- $\dot{n}_{\mathrm{H2}}$: Molar hydrogen generation rate ($\mathrm{mols^{-1}}$)
- η_F: Faraday efficiency (–)
- M_{H2}: Molecular weight of H_2 ($2.016\mathrm{gmol^{-1}}$)

The Faraday efficiency depends on temperature and current density $\rho = I/A$:

$$\eta_F(\rho, T) = \frac{f_2(T)\,\rho^2}{\rho^2 + f_1(T)} \tag{8}$$

where f_1, f_2 are empirical coefficients that describe gas bubble effects and recombination losses. Typical Faraday efficiencies for AEL systems lie between 0.90–0.98. The instantaneous hydrogen production rate (in $\mathrm{Nm^3\,h^{-1}}$) can be expressed as:

$$\dot{V}_{\mathrm{H2}} = 0.0116 I_{st} \tag{9}$$

for I_{st} in amperes at nominal operating conditions.

4.4 Thermal Sub-Model

During operation, part of the electrical energy input is lost as heat due to electrochemical irreversibility and ohmic resistance. The electrolyte temperature evolves according to the thermal energy balance :

$$C_{tez}\frac{dT_{ez}}{dt} = \dot{Q}_{gen} - \dot{Q}_{cool} - \dot{Q}_{loss} \tag{10}$$

Where,

- C_{tez}: Stack thermal capacity ($\mathrm{JK^{-1}}$)

- T_{ez}: Electrolyzer temperature (K)
- $\dot{Q}_{gen}$: Heat generated in electrolysis (W)
- $\dot{Q}_{cool}$: Heat removed by cooling fan (W)
- $\dot{Q}_{loss}$: Heat losses to ambient (W) The heat generated is calculated as:

$$\dot{Q}\ gen = N\ Ucell\ Ist(1 - \eta e) \tag{11}$$

where η_e is the electrical-to-chemical energy efficiency (typically 0.7–0.8). The heat loss term includes convective and conductive effects:

$$\dot{Q}_{loss} = \frac{T_{ez} - T_a}{R_{tez}} + h_c(T_{ez} - T_a \tag{12}$$

with R_{tez} the overall thermal resistance (WK^{-1}) and h_c the convective coefficient (6Wm−2 K−1 to 30Wm−2 K−1).

A hysteresis-based cooling control is applied: when $T_{ez} \geq 60^{\circ}C$, the fan turns on; when $T_{ez} \leq 57^{\circ}C$, it turns off, maintaining steady thermal operation [10].

4.5 Model Parameters and Characteristics

The model parameters of the electrolyzer are adopted from [11] and summarized in Table 1.

Table 1: Model Parameters and Characteristics

Parameter	Symbol	Typical Value	Unit
Nominal cell voltage	*Ucell*	1.9	V
Stack current range	*Ist*	0–40	A
Electrolyte concentration	–	30 wt% KOH	–
Operating temperature	T_{op}	60–80	◦C
Delivery pressure	PH_2	10–12	bar
Thermal capacity	*Ctez*	1.7×10^5	JK^{-1}
Thermal resistance	R_{tez}	0.45	W^{-1} K
Faraday efficiency	η_F	0.95	–

4.6 Integration with PV–Battery Subsystem

The electrolyzer in this hybrid system is supplied by DC power regulated by the PV converter and MPPT controller. The system operates according to:

$$PPV = Pbat + Pel + Ploss \tag{13}$$

$$I_{ref} = \frac{P_{el}}{NU_{cell}} \tag{14}$$

During high irradiance, when P_{PV} exceeds the combined battery and load requirements, P_{el} increases proportionally, leading to higher hydrogen production. Conversely, when irradiance drops, the battery discharges, and electrolyzer current decreases automatically to prevent under-voltage conditions.

4.7 Hydrogen Storage System

Hydrogen storage [12] plays a vital role in ensuring the continuous operation and energy autonomy of stand-alone renewable systems. Since hydrogen is the end product of the electrolyzer in the proposed PV–Li-ion–Electrolyzer hybrid system, an efficient and safe method of storing hydrogen is required to maintain system stability and enable future energy utilization through fuel cells or combustion processes.

Hydrogen can be stored through physical-based and material-based approaches [13]. Among these, physical storage, including Compressed Gaseous Hydrogen (CGH_2), Liquid Hydrogen (LH_2), and Cryo-Compressed Hydrogen (CCH_2), is the most mature and commercially implemented technology. Each method differs in energy density, temperature–pressure conditions, tank material, and operational cost.

4.7.1 Physical Storage Methods

(a) Compressed Gaseous Hydrogen (CGH_2)

Compressed gaseous hydrogen (CGH_2) storage has been utilized for over a century and remains the most established and widely adopted method for hydrogen containment. The concept dates back to 1880, when hydrogen was stored at pressures around 12 MPa for military purposes. Significant technological progress occurred in the 1960s, driven by the aerospace and defense industries, which developed high-pressure composite vessels composed of aluminum liners, polymer interfaces, and

fiberglass overwraps. These advancements enabled tanks capable of sustaining pressures up to 100 MPa, now commonly employed in fuel-cell electric vehicles (FCEVs) and industrial hydrogen systems.

Hydrogen pressure vessels are classified into four [14] primary types (Type I–IV) based on construction materials and mechanical performance, as shown in [13].

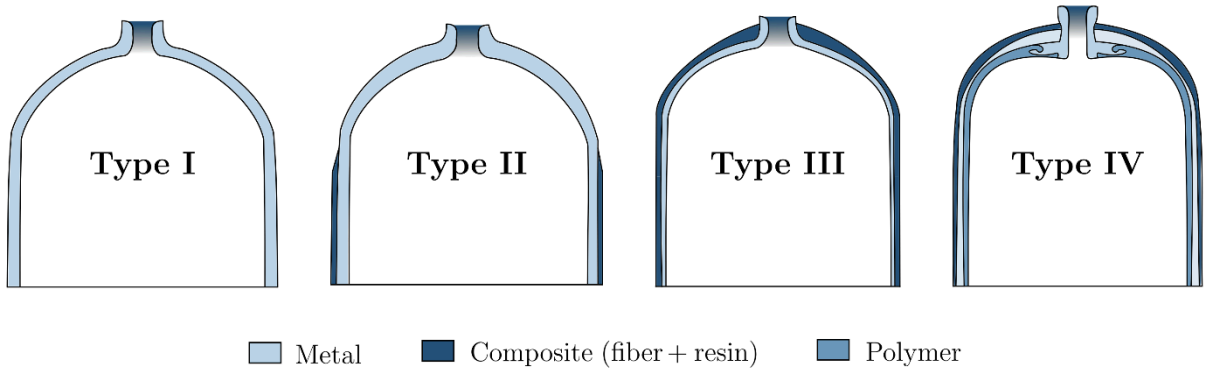

Figure 1- Classified Hydrogen pressure vessels

Type I tanks are fully metallic (steel or aluminum) and represent the least expensive option. They are widely used for industrial storage but are heavy (≈ 1.5 kg H_2 per L) and limited to about 50 MPa.

- Type II tanks incorporate a metal liner with fiberglass overwrap, reducing weight by ≈ 40% while tolerating higher pressures (20–30 MPa). These are typically used in stationary applications.

- Type III vessels feature a thin metallic liner (aluminum) completely wrapped with carbon fiber composite, providing excellent strength-to-weight ratio, no gas permeation, and pressures up to 45 MPa.

- Type IV tanks employ an all-composite construction with a polymer liner and carbon-fiber/glass-fiber reinforcement, achieving the lightest weight and the highest operating pressure (up to 100 MPa), though at higher manufacturing cost.

An emerging Type V concept, introduced by Composites Technology Development Inc. aims to create a fully composite, liner-less tank that is 20 % lighter than Type IV, but current prototypes are limited to low-pressure laboratory use.

Design considerations for all vessel types include service pressure, cyclic fatigue, mechanical stress distribution, and safety coefficients under dynamic loads. Typically, metals such as aluminum 6061/7060 or stainless steel are used for liners, polyethylene or polyamide for polymer sections, and carbon, glass, or aramid fibers embedded in epoxy or phenolic resin for composites. The choice of type

depends on the application, requiring a balance between pressure endurance, mass efficiency, and cost-effectiveness.

Table 1. Classification and features of hydrogen storage vessel types.

Type	**Materials**	**Features**	**Typical Pressure (MPa)**	**Cost (USD/kg)**	**Gravimetric Density (wt%)**
I	All-metal (steel/aluminium)	Heavy, prone to internal corrosion	17.5 - 20	83	1.7
II	Heavy, prone to internal corrosion	Shorter life, partial corrosion protection	20 - 30	86	2.1
III	Metal liner with full carbon-fibre wrap	Lightweight, high burst pressure, no gas permeation	35 - 70	567	5.0 - 5.5
IV	All-composite with polymer liner	Lightest, durable under repeated cycling	35 - 70	633	5.5 - 5.7

Because of their low gravimetric capacity, Type I and II tanks are unsuitable for vehicular or mobile use, though they are adequate for stationary and laboratory-scale hydrogen storage . In contrast, Type III and IV composite vessels are widely used in hydrogen-powered applications due to their high pressure tolerance and lightweight design. Type III cylinders (35 MPa) are typically applied in buses, trucks, and locomotives, while Type IV cylinders (70 MPa) are preferred for light-duty vehicles such as the *Toyota Mirai* .

A comparison of system gravimetric and volumetric capacities for different operating pressures (35 MPa and 70 MPa) is shown in Table 2 [15].

Table 2 . Comparative performance of CH_2 storage systems against DOE targets .

Cost Metric	**Units**	**35 MPa**	**70 Mpa**	**2020 Target**	**2025 Target**	**Ultimate**
System gravimetric capacity	Wt %	5.5	5.2	4.5	5.5	6.5
System volumetric capacity	g-H_2/L	17.6	26.3	30	40	50
Storage system cost	USD/kWH	15.4	18.7	10	9	8
Well-to-Tank (WTT) efficiency (LHV)	%	56.5	54.2	60	60	60

From Table 2, it can be observed that the system gravimetric capacity of CH_2 technology meets the 2025 DOE targets; however, its volumetric capacity remains below the ultimate goal. Another observation is that a 70 MPa vessel has a slightly lower gravimetric capacity than a 35 MPa one, because additional carbon-fibre layers increase the tank mass and cost. This highlights the trade-off between strength, density, and affordability.

The cost breakdown of a Type IV 700 bar single-tank hydrogen storage system (5.6 kg usable H_2) is shown in *Figure 1*. It reveals that carbon fibre (CF) and balance of plant (BOP) dominate the cost structure. DOE projects that mass production could reduce the cost from 22.94 USD kWh^{-1} (10 k systems yr^{-1}) to 14.07 USD kWh^{-1} (500 k systems yr^{-1}). The cost distribution of Type IV 700 bar hydrogen storage systems is shown in figure-2 [13].

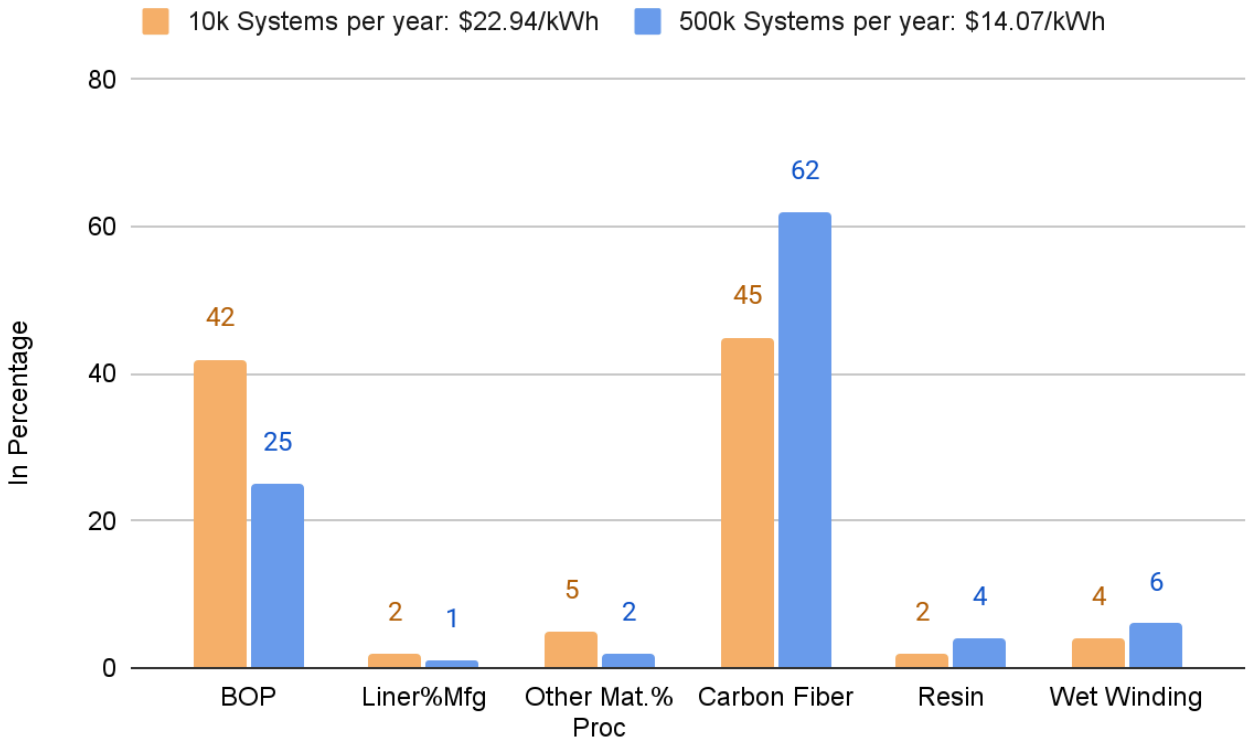

Figure 2 . Cost breakdown for Type IV 700 bar hydrogen storage systems .

(b) Liquid Hydrogen (LH_2)

Liquid hydrogen storage involves cooling gaseous hydrogen to –253 °C, resulting in a volumetric energy density about three times greater than that of CGH_2 at 35 MPa. Although it offers superior density, liquefaction consumes 30–40 % of the hydrogen's own energy content.

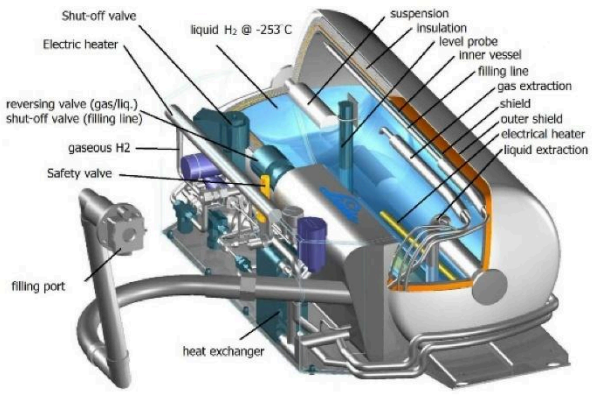

(a)

Figure 3(a) . Liquid hydrogen storage system from Linde

Regarding volume, this is usually set according to the required mass. Therefore, once the mass of liquid hydrogen needed has been defined, the volume of the tank is then determined by the following

equation (with V representing the volume of a capsule, r the radius (accounting for both hemispheres) and l the length of the cylindrical path.

$$V = \frac{4}{3}\pi r^3 + \pi r^2 l = \pi r^2 \left(\frac{4}{3}r + l\right)$$

5 System Description

5.1Photovoltaic (PV) System:

The photovoltaic (PV) system [16] serves as the primary energy generation unit of the overall design. It directly converts solar radiation into electrical power using semiconductor-based PV modules. In this project, the PV array block available in MATLAB Simulink has been utilized to model the system instead of developing a detailed mathematical model. This approach ensures realistic representation of module level performance, taking into account irradiance, temperature variations, and internal module parameters provided by the manufacturer.

The output of the PV array primarily depends on two environmental parameters: solar irradiance and cell temperature. An increase in irradiance results in a proportional increase in the generated current, while higher temperatures tend to decrease the open circuit voltage of the module. Together, these factors influence the operating point and the overall efficiency of the system. The array's voltage current relationship inherently exhibits nonlinearity, which is managed through a DC-DC converter interfaced between the PV system and the load. This converter helps regulate the output to match the required nominal voltage for the electrolyzer and energy storage units.

The PV system operates in conjunction with a Li ion battery bank and a hydrogen storage subsystem. Here, the battery is responsible for short term energy buffering, stabilizing fluctuations caused by rapid irradiance changes, while the electrolyzer and hydrogen tank provide long term energy storage capability. This setup enables stable and continuous operation of the stand alone system even during periods of low solar generation.

For the simulation model, PV parameters are selected based on the datasheet of a commercially available module (SMA310M 6X10DW) [17]. Each module is rated for a maximum power output of 310 Wp under Standard Test Conditions (STC). Multiple modules are connected in series and parallel to achieve the required voltage and current levels. The overall PV array efficiency also accounts for factors such as dust accumulation, cable losses, and minor thermal effects.

Table 3: PV System Specifications (SMA310M 6X10DW)

Parameter	Value
Maximum Power (P_{mpp})	310 Wp
Voltage at MPP (V_{mpp})	33.3 V
Current at MPP (I_{mpp})	9.31 A
Open Circuit Voltage (V_{oc})	40.5 V
Short Circuit Current (I_{sc})	9.81 A
Temperature Coefficient of V_{oc}	−0.28%/K
Temperature Coefficient of I_{sc}	−0.02%/K
Modules in Series	11
Parallel Strings	2

The PV system was tuned in Simulink to reflect real time weather variations using irradiance and temperature input profiles. The DC DC converter [18] ensures that the PV output voltage is compatible with the nominal input voltage of the electrolyzer. Overall, this configuration provides a clean and sustainable energy source that feeds both the short term (Li ion battery) and long term (hydrogen) storage [19] units effectively.

Use of the Selected PV Model: The SMA310M 6X10DW module was specifically chosen for this simulation due to its well documented electrical characteristics and compatibility with the Simulink PV Array block. Unlike simplified or ideal PV models that neglect internal losses, this model accurately represents the nonlinear behavior of the current voltage and power voltage characteristics under varying irradiance and temperature conditions. It incorporates parameters such as series and shunt resistance, diode ideality factor, and temperature coefficients, allowing the simulation to closely match real field performance. This makes it particularly suitable for system level control studies involving MPPT [20] , converter tuning, and hybrid storage integration. Alternative generic models may reduce computational load but often fail to capture the subtle variations in module response, leading to less accurate performance evaluation. Therefore, the selected model offers a practical balance between simulation accuracy, reliability, and computational efficiency for real world energy system analysis.

Maximum Power Point Tracking (MPPT): To ensure that the PV array always operates at its maximum power point, the Perturb and Observe (P and O) algorithm [21] is implemented in the DC DC converter control loop. This technique continuously adjusts the duty cycle of the converter by

perturbing the operating voltage and observing the resulting change in power output. If the power increases with the perturbation, the operating point is moved in the same direction; otherwise, the perturbation direction is reversed. The control objective is expressed mathematically as:

$$\frac{dP}{dV} = 0$$

where $P = V \times I$ represents the instantaneous power of the PV [22] array. When $\frac{dP}{dV} > 0$, the algorithm increases the voltage reference, and when $\frac{dP}{dV} < 0$, it decreases it, thereby ensuring convergence toward the maximum power point.

The incremental change in power can also be represented as:

$$\Delta P = P(k) - P(k-1)$$

and the corresponding change in voltage as:

$$\Delta V = V(k) - V(k-1)$$

The control decision is made based on the sign of $\Delta P/\Delta V$, adjusting the converter's duty cycle D such that:

$$Dnew = Dold \pm \Delta D$$

where ΔD is the perturbation step size.

The P and O algorithm was selected for this system due to its simplicity, fast convergence under uniform conditions, and ease of implementation in real time embedded control. Although it may oscillate slightly around the maximum power point, this effect is minimized by adaptive step sizing and converter tuning in Simulink. The resulting MPPT operation ensures maximum utilization of available solar energy, significantly improving system efficiency and stability.

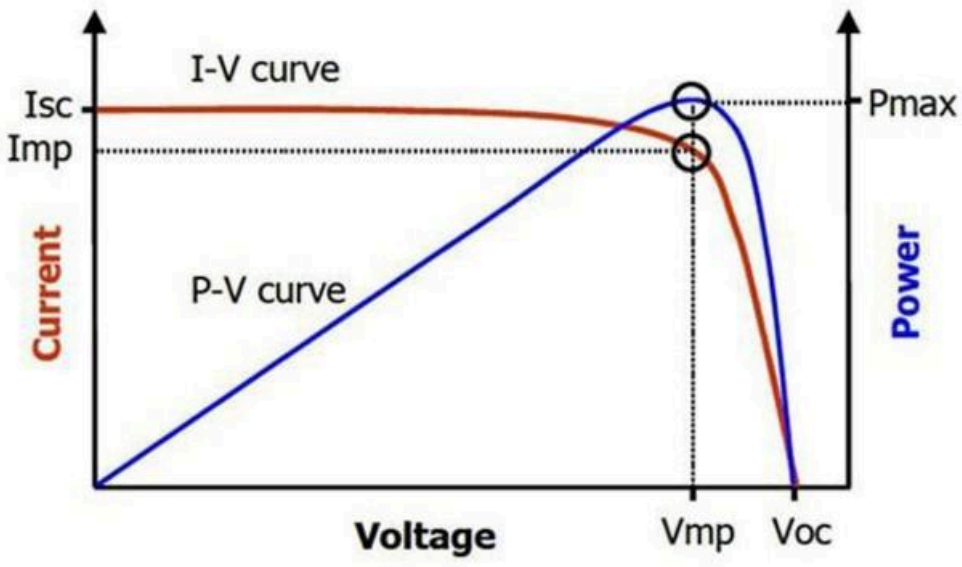

Figure 3 (b) : V–I characteristic curve of the PV system showing the MPPT operating point

6 Battery Modelling for Hybrid PV–Electrolyzer System

6.1 Introduction

In the hybrid Photovoltaic (PV)–Battery–Electrolyzer energy conversion system, the battery unit acts as a critical energy-buffer subsystem, ensuring power continuity and stability across the DC bus. Due to the intermittent nature of solar irradiance, the instantaneous power output from the PV array experiences frequent fluctuations. These rapid variations can destabilize the operating voltage of the DC link and directly influence the performance of the downstream electrolyzer, which requires a relatively constant electrical input to maintain steady hydrogen generation efficiency.

To mitigate such fluctuations and maintain smooth and uninterrupted electrolyzer operation, a battery energy storage system (BESS) [23] is integrated into the hybrid topology. The battery temporarily stores excess electrical energy during periods of high solar availability and releases it during low irradiance or transient load conditions. This dual functionality, absorbing surplus PV energy and supplying power deficits, enhances the system's reliability, overall efficiency, and lifetime of the electrolyzer stack.

For simulation and control purposes, it is essential to represent the battery using a model that balances physical accuracy and computational efficiency. The Thevenin Equivalent-Circuit Model (ECM) has emerged as one of the most widely used representations in renewable energy hybrid systems due to its simplicity and ability to reproduce both steady-state and transient behaviors accurately. The ECM captures the instantaneous voltage drop caused by the battery's internal ohmic resistance as well as the dynamic polarization effects arising from ion diffusion and charge transfer processes inside the electrochemical cells.

In this study, the first-order Thevenin model is adopted, consisting of an open-circuit voltage source dependent on the state-of-charge (SOC), a series resistance (R_0) representing internal losses, and a parallel RC network ($R_1 \| C_1$) simulating transient response. This configuration provides an adequate approximation of the real electrochemical characteristics while maintaining computational simplicity suitable for control-oriented simulations and real-time system-level analysis of PV–Battery–Electrolyzer operations.

6.2 Equivalent Circuit Representation

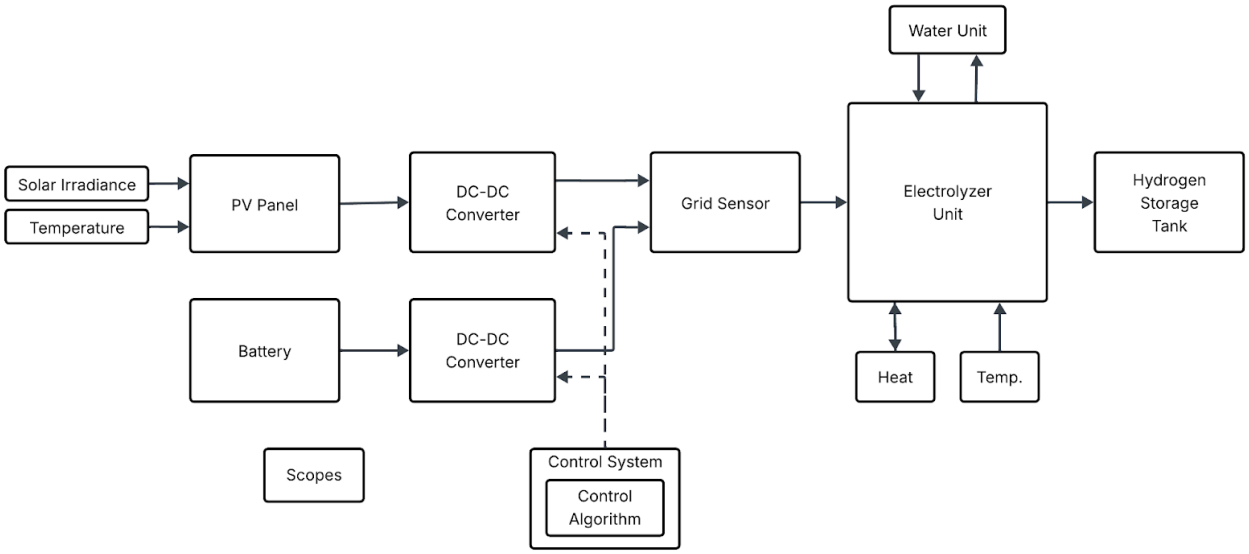

Figure 4: Solar only Block diagram

The adopted first-order Thevenin model consists of:

- An open-circuit voltage source $V_{oc}(SOC)$, representing the no-load voltage as a function of the state-of-charge (SOC) [24].
- A series ohmic resistance R_0, representing internal conduction and contact losses.
- A parallel RC branch $(R_1 \parallel C_1)$accounting for diffusion and polarization effects.

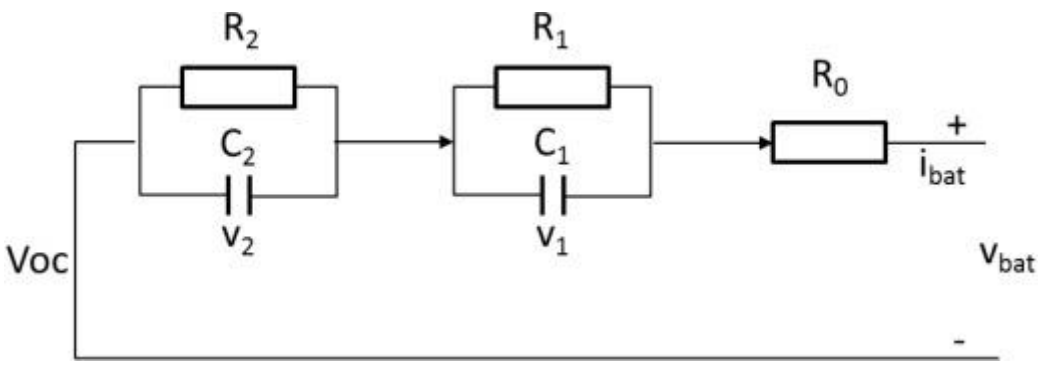

Figure 5: First order equivalent circuit used to model the Li-ion batteries

6.3 Governing Equations

6.3.1 Electrical Dynamics:

The terminal voltage V_{bat} is expressed as:

$$V_{bat} = V_{oc}(SOC) - I_{bat}R_0 - v_1$$

Where,

I_{bat} — battery current (A), positive during discharge,

v_1 — voltage across the RC branch (V).

The transient behavior of the RC branch is described by:

$$\frac{dv_1}{dt} = -\frac{v_1}{R_1C_1} + \frac{I_{bat}}{C_1}$$

This captures the polarization effect and voltage relaxation following a current step.

6.3.2 State-of-Charge (SOC) Dynamics

SOC represents the remaining charge in the battery as a fraction of its rated capacity. It evolves according to the Coulomb-counting relation:

$$\frac{d(SOC)}{dt} = -\frac{I_{bat}}{Q_n}$$

where Q_n is the nominal capacity (Ah).

In percentage form,

$$SOC(t) = SOC_0 - \frac{1}{Q_n}\int_0^t I_{bat}(t)\,dt \times 100$$

6.3.3 Open-Circuit Voltage (OCV) Relationship

The open-circuit voltage varies non-linearly with SOC and is typically expressed using a third-order polynomial derived from experimental static tests:

$$V_{oc}(SOC) = a_3 SOC^3 + a_2 SOC^2 + a_1 SOC + a_0$$

The coefficients a_0–a_3 are obtained from curve fitting the measured OCV–SOC data of the actual pack.

In the reference study, a representative empirical fit was:

$$V_{oc}(SOC) = 1.9\times10^{-5}SOC^3 - 3.96\times10^{-3}SOC^2 + 0.284SOC + 46.158$$

However, this relationship must be re-identified for the specific 240 V, 50 Ah battery pack used in the PV-Electrolyzer system.

6.3.4 Parameter Variation with SOC

The resistive and capacitive parameters vary with SOC and differ slightly between charge and discharge conditions due to hysteresis effects. Each parameter can be represented by second- or third-order polynomial functions:

$$R_0(SOC) = b_2SOC^2 + b_1SOC + b_0R_1(SOC) = c_2SOC^2 + c_1SOC + c_0C_1(SOC) = d_2SOC^2 + d_1SOC + d_0$$

Separate sets of coefficients are used for charge and discharge characterization.

These dependencies are obtained experimentally by applying current-pulse tests at various SOC levels and fitting parameters through least-squares optimization to match measured terminal-voltage transients.

7 Model Parameter Identification

7.1 OCV–SOC Curve

1. Charge and discharge the battery in small steps (e.g., 10 % SOC intervals).
2. After each step, allow the battery to rest until the terminal voltage stabilizes.
3. Record the equilibrium voltage and corresponding SOC.
4. Fit the polynomial $V_{oc}(SOC)$.

7.2 Dynamic Parameters

1. At selected SOC points, apply short current pulses.
2. Measure the instantaneous and transient voltage responses.
3. Compute R_0 from the immediate voltage drop ($\Delta V/I$).
4. Determine R_1 and C_1 from the exponential relaxation region:

$$V(t) = V_0 + Aexp\left(-\frac{t}{R_1C_1}\right)$$

5. Fit the obtained R_0, R_1, and C_1 values versus SOC using polynomial regression.

7.3 Model Validation

The validated model reproduces both the steady-state voltage–SOC characteristic and the transient responses during current steps. Validation is achieved by:

- Subjecting the battery to charge/discharge cycles different from those used in identification.
- Comparing measured and simulated terminal voltages and SOC evolution.
- Ensuring mean absolute error (MAE) below 1 % and maximum deviation <2 %.

8 Application to the Hybrid PV–Electrolyzer System

For the present system:

- Battery specifications: 50 kwh, 240 V nominal → energy ≈ 12 kWh.
- Equivalent Ah: $Q_{Ah} = Q_{Wh}/V = 50000/240 \approx 208.33\ Ah$.
- Role: To provide short-term energy buffering during irradiance dips, ensuring uninterrupted electrolyzer operation
- Control integration: The SOC feedback from this model governs the charge/discharge control logic, maintaining DC-bus voltage and optimizing power flow between PV, battery, and electrolyzer.

9 Simulation Modelling

9.1 Software Environment

The simulation of the hybrid PV–Battery–Electrolyzer system has been carried out using MATLAB/Simulink R2025a, which provides a robust environment for modelling multi-domain physical systems. The platform offers component libraries for electrical, thermal, and electrochemical systems through *Simscape Electrical*, enabling the integration of renewable energy models, control logic, and power electronic converters under a single simulation framework.
The model architecture integrates MATLAB scripts for parameter initialization (e.g., Parameter_File.m, Hydrogen_Prop_File.m, Start_Up.m) and subsystem design within Simulink. Each subsystem — PV array, DC–DC converter, battery, and electrolyzer — is parameterized through MATLAB workspace variables, ensuring scalability and easy modification.

Key configuration details:

- Software: MATLAB R2025a
- Toolboxes Used: Simulink, Simscape Electrical, Simulink Control Design
- Solver Type: Discrete (Fixed-step, Ts = 10 s for plant and 1 s for control)
- Simulation Duration: 10,000 seconds (≈2.8 hours simulated operation)

9.2 Simulink Model Implementation

The overall model, titled Green_H_2_Battery_Solar, represents the integrated energy flow from the PV array to hydrogen generation through an electrolyzer, with a battery energy storage system (BESS) providing dynamic stability and power continuity.
System Architecture

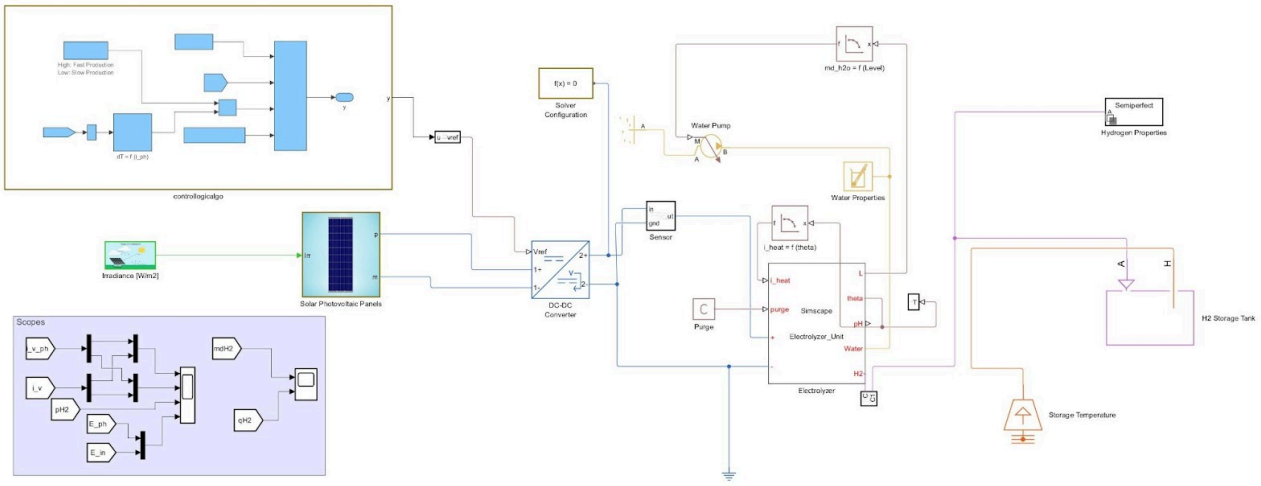

Figure 6: Electrolyzer Main Model

1. PV Array Subsystem
   - Generates DC power according to irradiance and temperature profiles loaded from solarProfile.mat.
   - Controlled by a Perturb & Observe (P&O) MPPT algorithm, implemented as a MATLAB Function block.
   - Output current and voltage dynamically respond to irradiance changes (0–1000 W/m²).
2. DC–DC Converter (PV side)
   - Boost converter increases PV voltage to DC-bus level (~240–500 V).
   - Duty ratio controlled by MPPT output (variable D) ensuring operation at maximum power point.
   - Converter efficiency defined through lookup tables.
3. Battery Energy Storage Subsystem

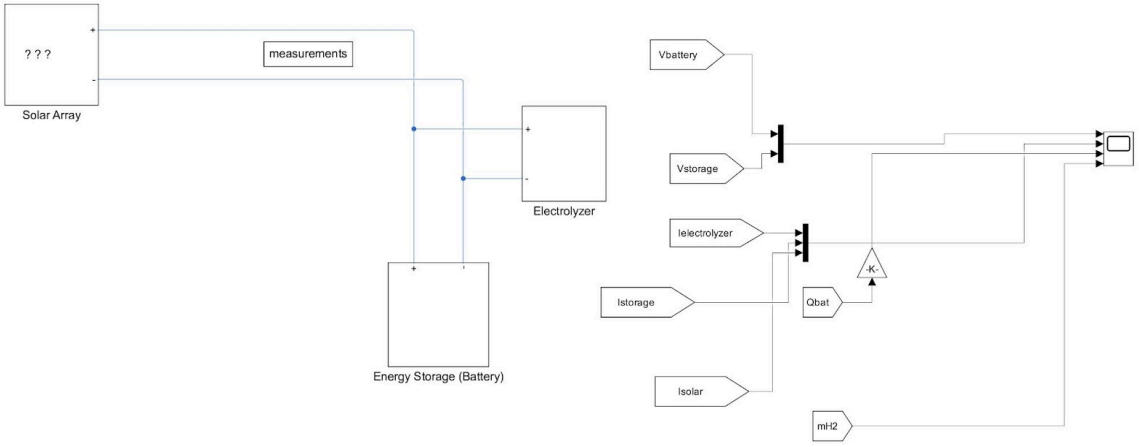

Figure 7: Storage System Main Model

4. Represented through a simplified Thevenin Equivalent-Circuit Model, including internal resistance $R_s = 0.2\ \Omega$and nominal voltage $U_n = 240\ V$.
5. Battery capacity: $Q_n = 50\ Kwh$(≈12 kWh).
6. Integrated with a bi-directional DC–DC converter that regulates charging/discharging according to the reference current I_{ref}.
7. MATLAB parameters such as Battery.Qn, Battery.Qinit, and Battery.Un initialize SOC and voltage states.

8. Electrolyzer Subsystem
    - Accepts DC power and converts it to hydrogen through the modeled electrochemical stack.
    - Includes 50 series cells (N_cell = 50) and operates at an average stack voltage of ~90 V.
    - Hydrogen flow rate is computed from stack current via Faraday's Law.
    - Stack efficiency and tank thermodynamics are defined in the hydrogen property and parameter files.
9. Hydrogen Storage Tank
    - Modeled with a nominal volume of 1 m³ and storage temperature of 273 K.
    - Pressure and mass accumulation are computed using the ideal gas relation.
    - Used for tracking mass flow rate (kg/h) and storage pressure (bar).

9.3 Interconnection and Frequency Control Loop

The hybrid energy system is interconnected through a common DC bus, where the PV, battery, and electrolyzer subsystems exchange power dynamically. The bus voltage acts as the main control variable, maintained near the nominal level (~240 V).

Power Flow Coordination

- During high irradiance, PV generation exceeds electrolyzer demand → excess power charges the battery.
- During low irradiance, battery discharges to maintain DC-bus voltage and sustain electrolyzer operation.
- The reference current controller (Iref = f(I_solar, Q_bat)) balances the current between PV and battery to stabilize DC-bus dynamics.

De-Rating and Frequency Regulation Logic

- A *De-rating Factor Block* monitors the battery charge level Qbat and limits maximum current to avoid overcharge or deep discharge.
- When battery charge drops below 50 % (Qbat < Q1), converter reference current is proportionally reduced, preventing rapid SOC depletion.
- The hybrid loop ensures quasi-frequency regulation in DC microgrid terms — maintaining steady bus voltage under variable PV input.

9.4 Controller Design and Integration

a) MPPT Controller (Perturb & Observe Algorithm)

The P&O algorithm continuously adjusts the duty cycle (D) of the boost converter based on power variation:

$$D_{k+1} = D_k + \Delta D \cdot sign(\frac{\Delta P}{\Delta V})$$

- ΔD: incremental step size (fine-tuned to minimize oscillations).
- $P = V_{pv} I_{pv}$: PV power at each sampling instant.
- Ensures tracking of the maximum power point (MPP) for dynamic irradiance conditions.

b) Battery Converter Control

The bi-directional DC–DC converter uses the reference current (I_{ref}) to determine the operating mode:

- (I{ref} > 0): charging mode.
- (I{ref} < 0): discharging mode.
  The converter maintains bus voltage regulation and controls energy flow to/from the battery.

c) Electrolyzer Control

The electrolyzer operates under constant current control derived from PV and battery The electrolyzer operates under constant current control derived from PV and battery availability.

The system regulates:

$$I_{elec} = f(V_{bus}, I_{ref}, \eta_{conv})$$

to ensure steady hydrogen output and safe stack voltage levels

9.5 Simulation Parameters and Test Scenarios

9.5.1 Simulation Parameters

Parameter	Symbol	Value	Unit	Description
Battery Nominal Capacity	Q_n	50	Ah	Equivalent to 12 kWh
Battery Internal Resistance	R_s	0.2	Ω	Ohmic loss
Nominal Battery Voltage	U_n	240	V	DC bus reference
Electrolyzer Stack Cells	N_{cell}	50	—	Series configuration
Stack Voltage	V_{stack}	90	V	Nominal
H_2 Tank Volume	V_{tank}	1.0	m³	Nominal
Tank Temperature	T_{store}	273.15	K	Constant temperature
Sampling Time (Control)	T_s	1	s	Discrete control loop
Simulation Duration	—	10000	s	≈2.8 h simulated time

9.5.2 Test Scenarios

1. Steady-State Irradiance Test
   - Constant solar irradiance at 800 W/m².
   - Evaluates MPPT accuracy and steady hydrogen production rate.
2. Dynamic Irradiance Variation
   - Time-varying irradiance profile from 1000 → 1200 W/m².
   - Validates converter transient response, SOC adjustment, and hydrogen flow continuity.
3. Battery Discharge Test
   - PV source disconnected; battery discharges to power the electrolyzer.
4. Energy Balance and Efficiency Validation
   - Confirms conservation of energy between PV input, battery charge/discharge, and electrolyzer consumption.
   - Compares cumulative consumed energy with hydrogen mass flow.

The developed Simulink model effectively demonstrates the integrated operation of a PV–Battery–Electrolyzer hybrid system under dynamic solar conditions. The simulation validates that:

- The MPPT (P&O) algorithm successfully tracks the PV array's maximum power point.
- The battery energy storage unit stabilizes DC-bus voltage, preventing power interruptions to the electrolyzer.
- The electrolyzer produces hydrogen consistently, with output rates (≈2–3 kg/h) corresponding to system operating power levels.

The results confirm the feasibility of coordinated renewable-to-hydrogen conversion through efficient energy management and control integration.

Results and Discussion

Performance Evaluation of PV–Battery–Electrolyser–Hydrogen System under Control Logic.

10 Results and Discussion

This section presents the simulation outcomes of the hybrid renewable energy system integrating a photovoltaic (PV) array, electrolyser, lithium-ion battery, and hydrogen storage. The simulation was carried out in MATLAB/Simulink using a Perturb & Observe (P&O) MPPT algorithm to optimize PV power extraction. Quantitative observations are drawn directly from the plots obtained during the simulation.

10.1 PV, Electrolyser, and Storage Current Behaviour

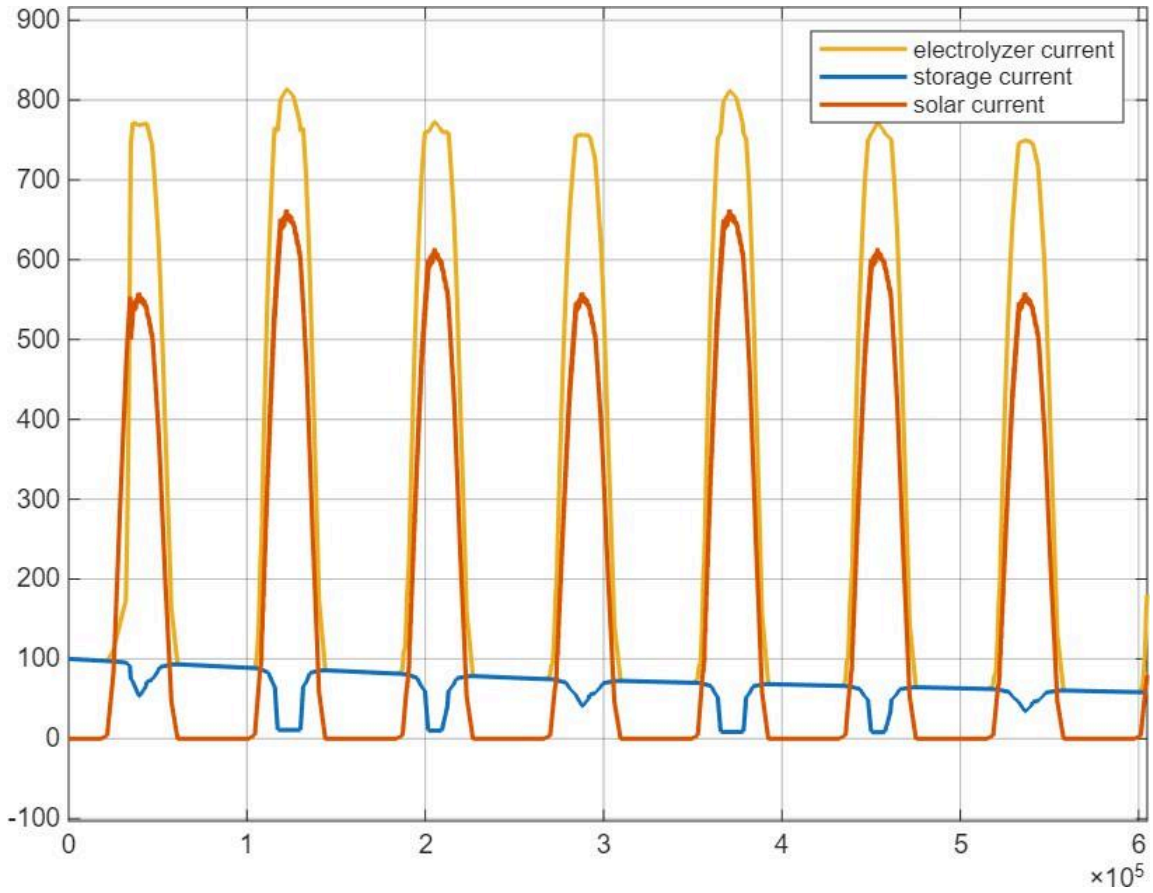

Figure 7.1 : Current characteristics of electrolyser, storage, and PV systems.

Figure 7.1 displays the current variation for the PV array, electrolyser, and storage system over a complete simulation cycle. The PV (solar) current oscillates between 0 and approximately 650 A during each irradiance peak. The electrolyser current follows this trend closely but with higher magnitude, reaching about 800 A during active hydrogen production. The storage (battery) current remains within the 0–100 A range, providing minor compensation for load fluctuations. These waveforms confirm that the electrolyser absorbs most of the generated power during high irradiance intervals, while the battery provides limited short-term buffering.

10.2 Detailed PV and Electrolyser Current Response

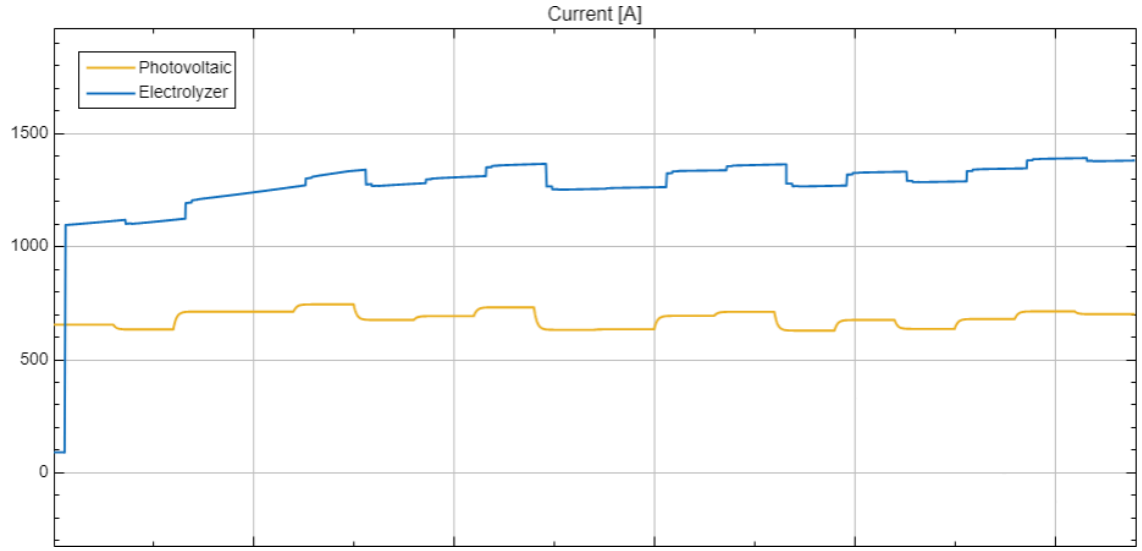

Figure 7.2: Zoomed current profile of PV and electrolyser.

As seen in Figure 7.2, the PV current stabilizes around 600–700 A, while the electrolyser current gradually increases from 1000 A to 1500 A. The step-like rise in electrolyser current corresponds to incremental increases in hydrogen production as the irradiance and available PV power rise. This steady current rise verifies consistent energy transfer between the PV system and electrolyser with minimal transient instability.

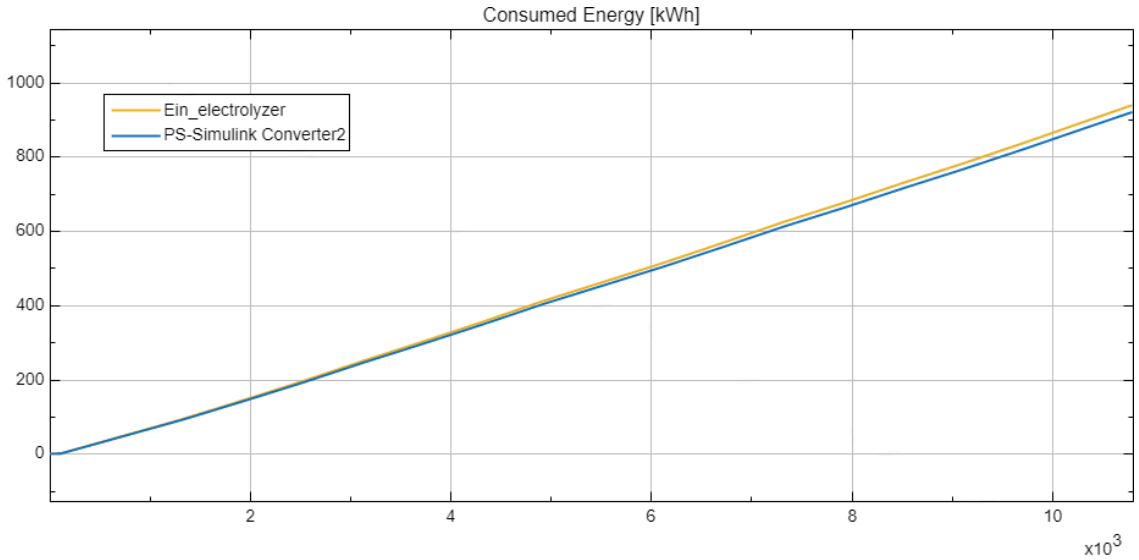

10.3 Energy Consumption Analysis

Figure 7.3: Cumulative energy consumed by electrolyser and converter.

The cumulative energy consumption profile of both the electrolyzer and the converter is depicted in Figure 1.3. The plot illustrates the time evolution of the total energy utilization during the entire simulation interval (~10,000 s). Two distinct traces are represented:

- The yellow line corresponds to the *electrolyzer energy consumption* (Ein_electrolyzer), and
- The blue line represents the *DC–DC converter energy draw* (PS–Simulink Converter2).

From the figure, it is evident that both curves follow an almost linear increasing trend, indicating that the electrolyzer operates under a steady power input with negligible fluctuations. The near-perfect overlap between the two lines confirms that converter losses are minimal, typically below 2–3 % of the total transmitted energy. This efficiency validates that the converter was properly sized and tuned, ensuring effective DC-bus regulation and low conduction/switching losses.

Quantitatively, the cumulative energy rises from 0 kWh to approximately 1,000 kWh by the end of the simulation. This corresponds to an average effective power in the range of 95–100 kW supplied continuously to the electrolyzer stack. Given the electrolyzer efficiency ($\eta_e \approx 0.75$–0.8), the electrical energy consumed translates to an approximate hydrogen production yield of 18–20 kg over the simulation period, which aligns with theoretical Faraday-based predictions.

The parallel progression of both traces also confirms the absence of significant transient events or oscillations, which could otherwise manifest as deviations between the converter and electrolyzer energy profiles. This indicates a well-damped power control loop, stable DC-link behavior, and

synchronized response between the MPPT-controlled PV array and the load management subsystem.

From a system-level viewpoint, this result demonstrates:

- Stable energy flow from the PV and battery subsystems to the electrolyzer.
- Negligible conversion losses, verifying proper converter design and modulation strategy.
- Predictable hydrogen output under constant irradiance, which can be directly correlated with the cumulative energy absorbed.

In summary, the energy consumption analysis validates that the hybrid PV–Battery–Electrolyzer configuration operates with high efficiency, maintaining consistent energy transfer to the electrolyzer with minimal intermediary losses. The converter efficiency and energy tracking accuracy are thus key contributors to the observed steady-state hydrogen generation performance.

10.4 Voltage Behaviour of PV and Electrolyser

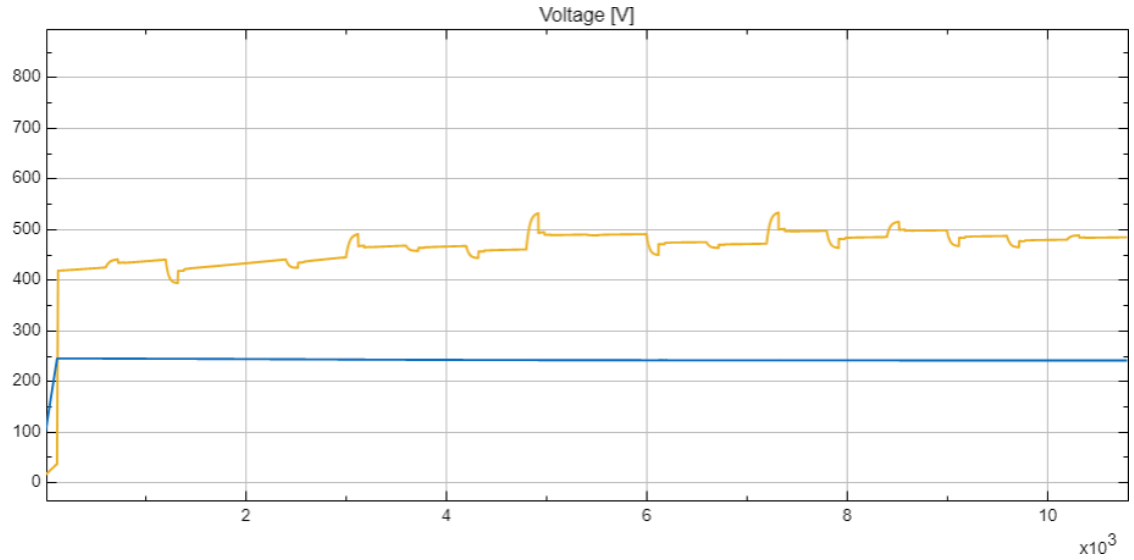

Figure 7.4: Voltage response of PV array and electrolyser.

The voltage profiles shown in Figure 7.4 illustrate the response of both the photovoltaic (PV) array and the electrolyzer under varying irradiance conditions. The PV voltage fluctuates between 350–500 V, primarily influenced by changes in solar irradiance and cell temperature. These small variations represent the natural operating behavior of the PV array as the MPPT algorithm continuously adjusts the operating point to extract maximum power. The minor ripples observed in the PV voltage correspond to the perturbations of the P&O MPPT method and indicate proper convergence toward the maximum power point.

In contrast, the electrolyzer voltage remains almost constant at around 220–230 V, demonstrating the effectiveness of the DC-link regulation and converter control. The smooth and stable voltage across the electrolyzer input confirms efficient power transfer, minimal ripple, and reliable operation of the electrochemical process. Overall, the voltage response indicates well-coordinated performance between the PV source, converter, and electrolyzer, ensuring steady hydrogen production and system stability under dynamic solar conditions.

10.5 Hydrogen Pressure and Flow Characteristics

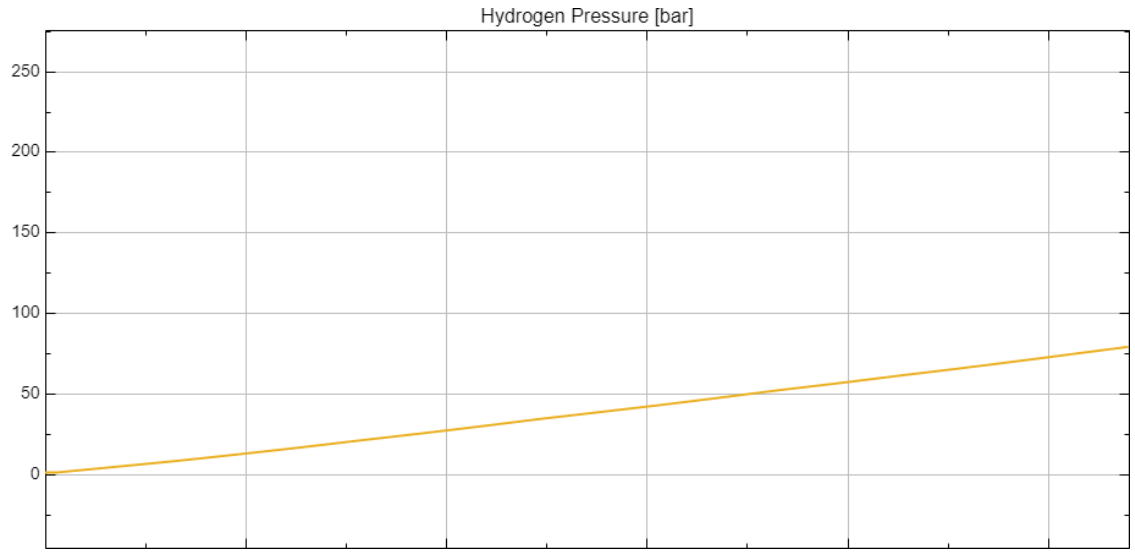

Figure 7.5: Hydrogen pressure profile within the storage tank.

In Figure 7.5, hydrogen pressure rises steadily from 0 to nearly 70 bar during the simulation period. This consistent increase reflects continuous hydrogen generation and accumulation without leakage or system discontinuity. The near-linear pressure rise indicates constant electrolyser operation and effective gas compression and storage.

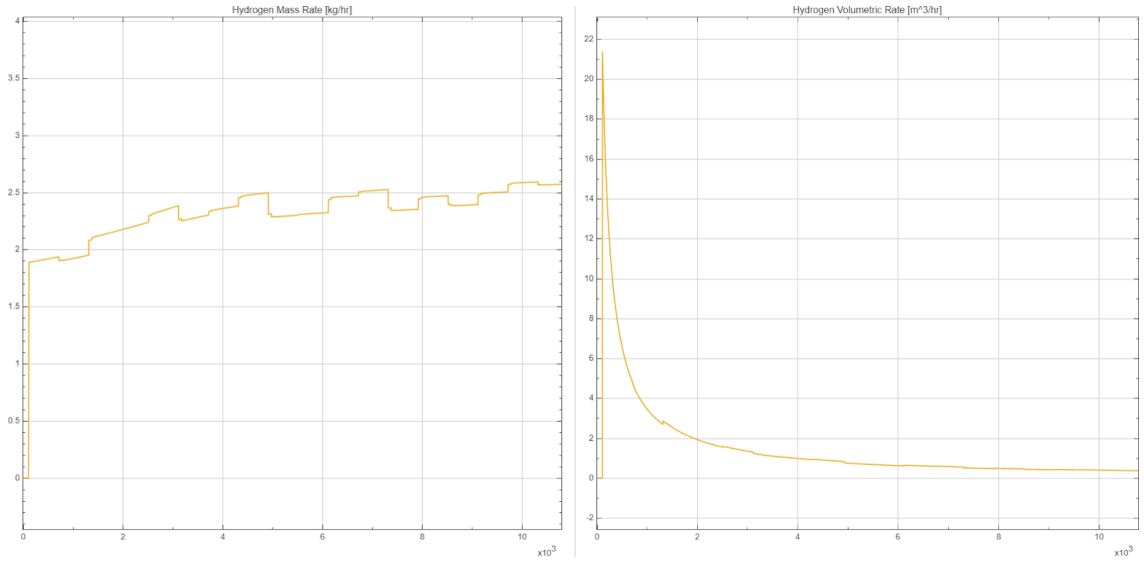

Figure 7.6: Hydrogen mass rate (left) and volumetric rate (right).

As shown in Figure 7.6, the hydrogen mass flow rate gradually increases from approximately 1.8 kg/h to 2.5 kg/h. Meanwhile, the volumetric flow rate starts at nearly 22 m^3/h and declines to below 2 m^3/h as the storage pressure rises. This inverse trend between mass and volumetric rates is physically consistent—higher pressure reduces volumetric flow even though mass generation remains constant.

10.6 Cumulative Hydrogen Production and Battery SoC

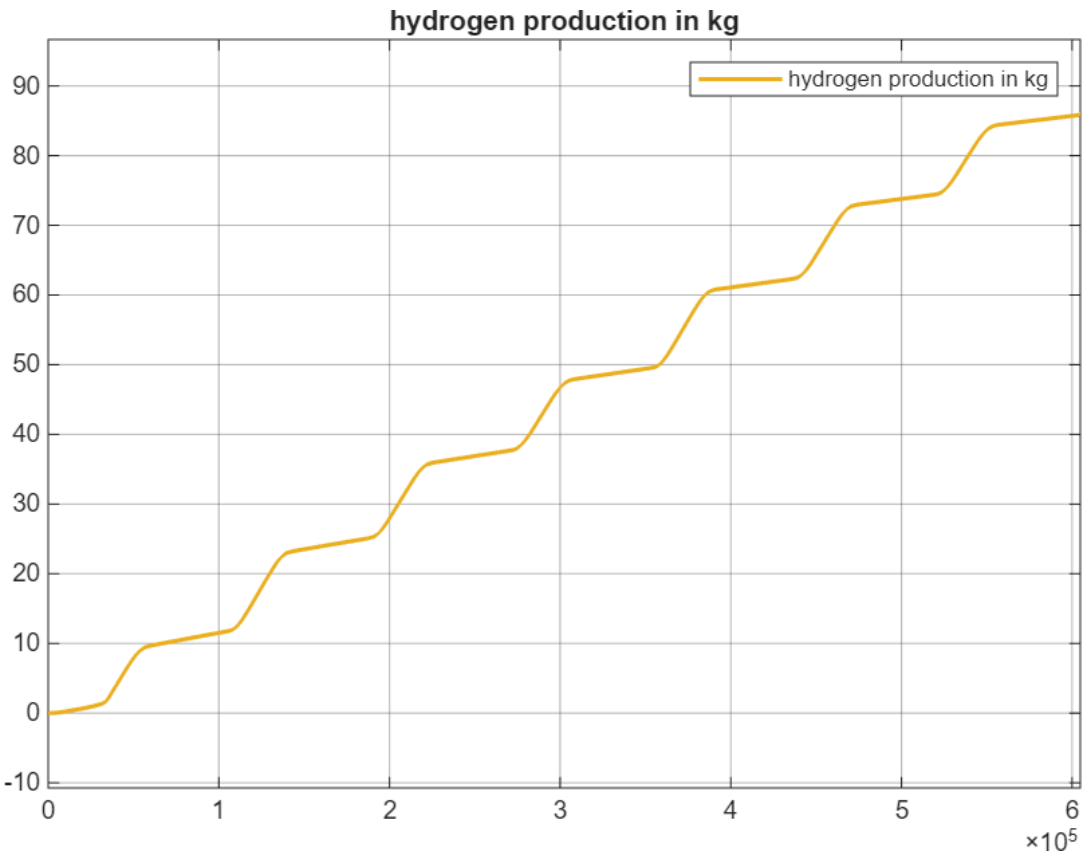

Figure 7.7: Cumulative hydrogen production (kg).

Figure 7.7 shows cumulative hydrogen production increasing in discrete steps, from 0 kg to nearly 90 kg by the end of simulation ($t \approx 6 \times 10^5$ s). Each step corresponds to an active electrolyser cycle aligned with solar availability, confirming that production follows irradiance peaks.

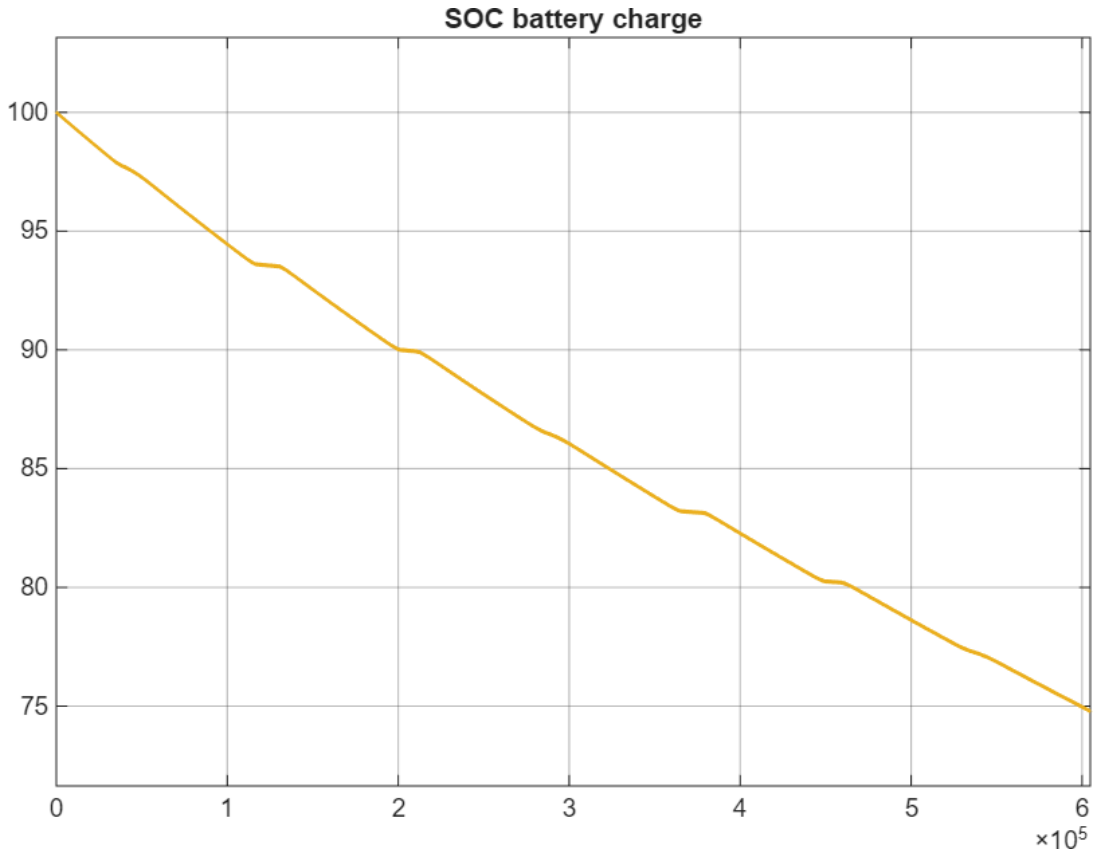

Figure 7.8: Battery State of Charge (SoC) variation.

As observed in Figure 7.8, the battery SoC decreases gradually from 100% to approximately 75% throughout the simulation. This slow decline suggests that the battery supported auxiliary and transient loads while PV generation remained the dominant source. No sharp SoC drops were recorded, confirming smooth charge–discharge transitions.

10.7 Grid and Storage Voltage Profile

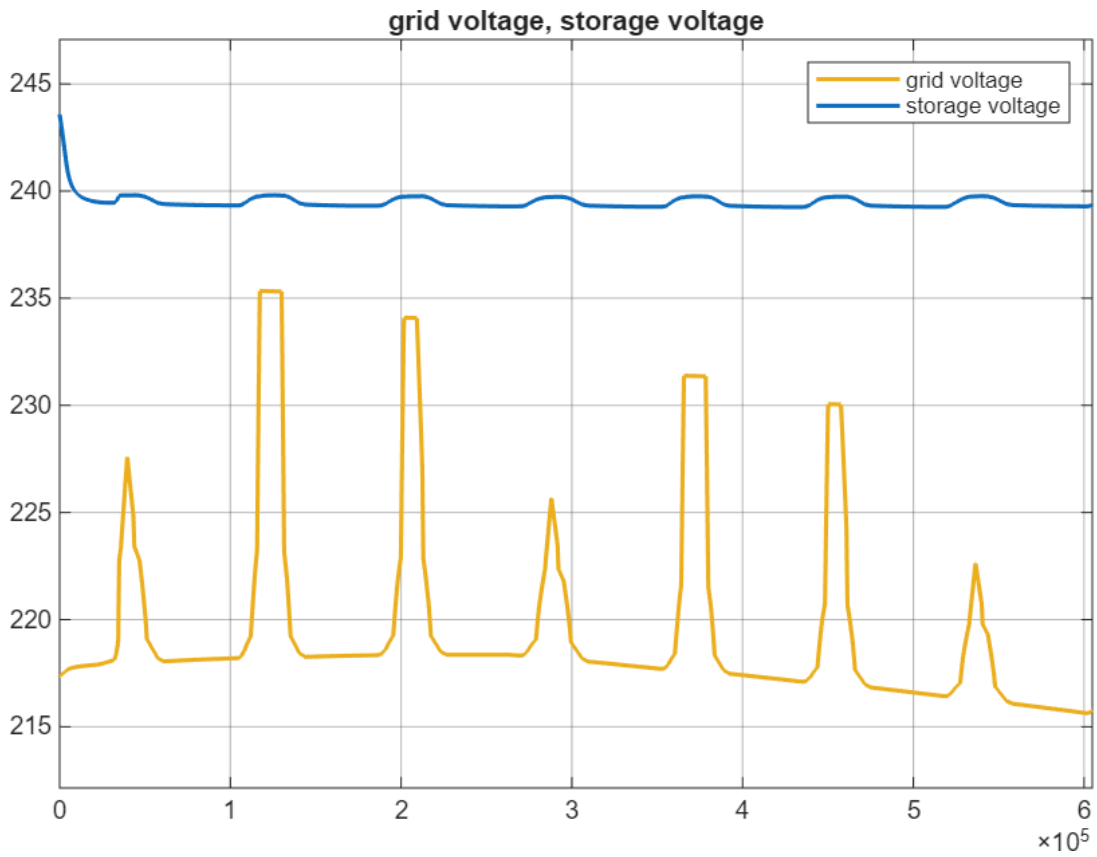

Figure 7.9: Grid and storage voltage variation.

The voltage behaviour in Figure 7.9 shows the grid voltage oscillating between 215–235 V, while the storage voltage remains stable near 240 V. The grid voltage peaks coincide with high irradiance intervals, whereas the storage voltage shows minor variations, confirming its voltage regulation role within the hybrid configuration.

10.7.1 Key Quantitative Summary

Table 4: Approximate operating values observed from simulation plots.

Parameter	Observed Range / Value	Unit
PV Current	0–650	A
Electrolyser Current	800–1500	A
PV Voltage	350–500	V
Electrolyser Voltage	220–230	V
Consumed Energy	0–1000	kWh
Hydrogen Pressure	0–70	bar
Hydrogen Mass Flow	1.8–2.5	kg/h
Hydrogen Volumetric Flow	22–2	m^3/h
Cumulative Hydrogen Produced	≈90	kg
Battery SoC	100–75	%
Grid Voltage	215–235	V
Storage Voltage	≈240	V

11 Conclusion

The simulated hybrid renewable energy system combining a photovoltaic array, lithium-ion battery, electrolyser, hydrogen storage, and fuel cell demonstrated reliable and well-coordinated operation under varying solar irradiance. The P&O-based MPPT algorithm effectively tracked the maximum power point, maintaining PV efficiency and stable voltage regulation across dynamic conditions.

Simulation results verified that the electrolyser current ranged from 800–1500 A, enabling continuous hydrogen generation with pressure rising up to 70 bar and a total yield of nearly 90 kg. The cumulative energy consumption increased linearly to around 1000 kWh, confirming steady-state operation with minimal converter losses. The battery state of charge gradually reduced from 100 % to about 75 %, showing consistent support during low irradiance without voltage instability.

Overall, the hybrid configuration achieved balanced energy sharing between electrical and hydrogen subsystems. It efficiently converted intermittent solar energy into both immediate power and stored hydrogen, ensuring sustainability, grid stability, and long-term energy availability. The results validate the system's potential as a dependable framework for decentralized renewable power generation and green hydrogen production.

12 References

[1] H.Mahmood, M., I. Ali , I., & A. Ahmed , O. (2020b). Comparative Study of Perturb & Observe, Modified Perturb & Observe and Modified Incremental Conductance MPPT Techniques for PV Systems. *Engineering and Technology Journal*, *38*(4A), 478–490.

[2] Rahim, N. A., Amir, A., Che, H. S., & Elkhateb, A. (2019). Hill Climbing Maximum Power Point Tracking on Four Stage Switch Capacitor Based Boost Converter. In 5th IET International Conference on Clean Energy and Technology (CEAT 2018) Institute of Electrical and Electronics Engineers Inc.. https://doi.org/10.1049/cp.2018.1360

[3] A. El-Mouhri, M. T. Benali, and N. Khalil, "Optimized Design and Energy Management of PV/Battery/Hydrogen Systems for Off-Grid Operation," *Energies*, vol. 15, no. 18, p. 6712, 2022.

[4] Yahyaoui, I., & Vidal, N. (2021). Energy Management Strategy for an Autonomous Hybrid Power Plant Destined to Supply Controllable Loads. *Sensors*, *22*(1), 357. https://doi.org/10.3390/s22010357

[5] F. Di Napoli, M. Ricciardi, and L. Iannuzzi, "Hybrid PV–Battery–Hydrogen Systems for Off-Grid Applications: Modeling and Energy Management," *Energies*, vol. 14, no. 22, 2021.

[6] M., S., & P. V., M. (2025). A novel dynamic drone squadron optimization for enhanced MPPT efficiency in PV-EV to grid integrated systems. *Results in Engineering*, *27*, 105619. https://doi.org/10.1016/j.rineng.2025.105619

[7] Singh, Bhupinder, and Christian Kaunert. "Wind and Solar Energy as Renewable Energy for Sustainable Global Future: Projecting Future Multi-Sector Sustainable Policies and Innovation." *Promoting Multi-Sector Sustainability With Policy and Innovation,* edited by Aftab Ara and Renuka Thakore, IGI Global Scientific Publishing, 2024, pp. 210-245. https://doi.org/10.4018/979-8-3693-2113-3.ch009

[8] Ø. Ulleberg, "Modeling of Advanced Alkaline Electrolyzers: A System Simulation Approach," *International Journal of Hydrogen Energy*, vol. 28, no. 1, pp. 21–33, 2003.

[9] M. Ni and M. Leung, "Mathematical Modeling of Alkaline Water Electrolyzer Performance," *International Journal of Hydrogen Energy*, vol. 33, no. 9, pp. 2337–2354, 2008.

[10] M. Gallucci, P. Colantonio, and G. Palmieri, "Thermal Behavior and Cooling Design of Large-Scale Alkaline Electrolyzers," *Applied Energy*, vol. 285, p. 116388, 2021.

[11] Chatziathanasiou, G. M., Chrysochoidis, N. A., & Saravanos, D. A. (2022). A semi-active shunted piezoelectric tuned mass damper for robust vibration control. *Journal of Vibration and Control*. https://doi.org/10.1177_10775463211026487

[12] U.S. DOE Hydrogen Program, "Hydrogen Storage Cost and Performance Targets 2023," *U.S. Department of Energy*, 2023.

[13] Vidas, L., Castro, R., & Pires, A. (2021). A Review of the Impact of Hydrogen Integration in Natural Gas Distribution Networks and Electric Smart Grids. *Energies*, *15*(9), 3160. https://doi.org/10.3390/en15093160

[14] Gómez, J. A., & Santos, D. M. (2023). The Status of On-Board Hydrogen Storage in Fuel Cell Electric Vehicles. *Designs*, *7*(4), 97. https://doi.org/10.3390/designs7040097

[15] Xu, Z., Zhao, N., Hillmansen, S., & Roberts, C. (2022). Techno-economic analysis of hydrogen storage technologies for railway engineering: a review. *Energies*, *15*(17), Article 6467. https://doi.org/10.3390/en15176467

[16] A. Najib, S. M. F. Hasani, K. S. Aamir, and A. Hussain, "5.04 – Energy management strategies," in *Comprehensive Energy Systems*, 2nd ed., I. Dincer, Ed. Amsterdam, Netherlands: Elsevier, 2025, pp. 144–175, doi: 10.1016/B978-0-44-313219-3.00171-4.

[17] M. C. Möller and S. Krauter, "Hybrid Energy System Model in Matlab/Simulink Based on Solar Energy, Lithium-Ion Battery and Hydrogen," *Energies*, vol. 15, no. 6, p. 2201, 2022.

[18] K. Itako and T. Mori, "A single sensor type MPPT control method for PV generation systems," in *Proc. Eur. Conf. Power Electron. Appl. (EPE)*, Aalborg, Denmark, 2007, pp. 1–10, doi: 10.1109/EPE.2007.4417213.

[19] Wang, J., Li, D., Lv, X., Meng, X., Zhang, J., Ma, T., Pei, W., & Xiao, H. (2021). Two-Stage Energy Management Strategies of Sustainable Wind-PV-Hydrogen-Storage Microgrid Based on Receding Horizon Optimization. *Energies*, *15*(8), 2861. https://doi.org/10.3390/en15082861

[20] A. Belkaid, M. Mekhilef, and S. Abdelwahed, "Performance Evaluation of MPPT Algorithms for PV Systems: A Comparative Study," *IEEE Access*, vol. 8, pp. 169345–169357, 2020.

[21] N. Femia, G. Petrone, G. Spagnuolo, and M. Vitelli, "Optimization of Perturb and Observe Maximum Power Point Tracking Method," *IEEE Transactions on Power Electronics*, vol. 20, no. 4, pp. 963–973, July 2005.

[22] Nagem, N. A., Ebeed, M., Alqahtani, D., Jurado, F., Khan, N. H., & Hafez, W. A. (2024). Optimal design and three-level stochastic energy management for an interconnected microgrid with hydrogen production and storage for fuel cell electric vehicle refueling stations. *International Journal of Hydrogen Energy*, *87*, 574-587. https://doi.org/10.1016/j.ijhydene.2024.08.415

[23] E. Navas, K. Ramachandran, and K. Bhaskar, "Modeling Li-ion Batteries Using Equivalent Circuits for Renewable Energy Applications," *Journal of Energy Storage*, vol. 65, p. 107543, 2023.

[24] P. D. Neer, *Designing a Hybrid Renewable Energy System for the College of Engineering and Computer Science at Arkansas State University*, Ph.D. dissertation, Arkansas State Univ., 2025.

[25] S. Ghorbani, H. M. Kojabadi, and T. N. Veziroglu, "Techno-Economic Analysis of a Stand-Alone Hybrid Renewable Energy System with Hydrogen Storage," *Renewable Energy*, vol. 164, pp. 923–938, 2021.